# 1-800-BOLLARDS

**The Bollard Experts**

| REVISIONS | | | |
|---|---|---|---|
| LTR | DESCRIPTION | DATE | APPVD |
| | | | |
| | | | |
| | | | |

COMMENTS

**SPECIFICATIONS**

HEIGHT: 45"
DIAMETER: 5.65"

- ☐ 5" BOLLARD COVER (4" NOMINAL BOLLARD SIZE)
  - ☐ CSS5010 SCHED 10 STAINLESS STEEL COVER
- ☐ STAINLESS STEEL BOLLARD COVER FINISH
  - ☐ POLISHED #4
- ☐ SELECT DESIRED STAINLESS STEEL BOLLARD MATERIAL:
  - ☐ TYPE 304
  - ☐ TYPE 316
- ☐ SELECT DESIRED BOLLARD CAP STYLE:
  - ☐ DOME (SHOWN)
  - ☐ STANDARD FLAT
  - ☐ REVEAL
  - ☐ SLOPED
- ☐ COVER HEIGHT SELECTION FROM:
  - ☐ BASE OF BOLLARD
  - ☐ TOP OF BOLLARD _____INCHES

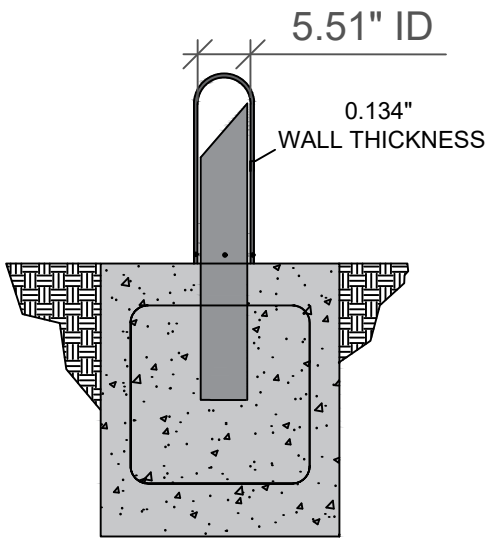


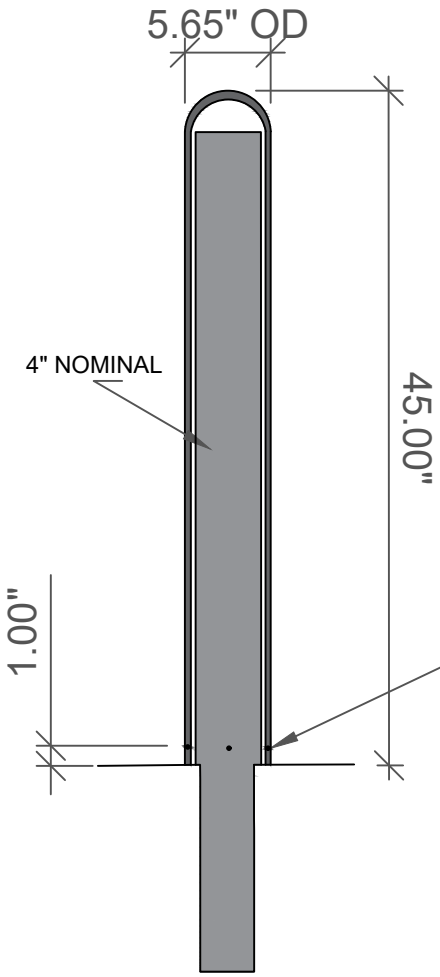


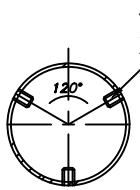

DOME (SHOWN) STANDARD FLAT REVEAL SLOPED

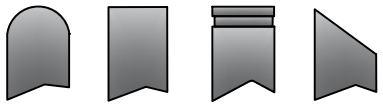

NOTES:
1. INSTALLATION TO BE COMPLETED IN ACCORDANCE WITH MANUFACTURER'S SPECIFICATIONS.
2. DO NOT SCALE DRAWING.
3. THIS DRAWING IS INTENDED FOR USE BY ARCHITECTS, ENGINEERS, CONTRACTORS, CONSULTANTS AND DESIGN PROFESSIONALS FOR PLANNING PURPOSES ONLY. THIS DRAWING
4. ALL INFORMATION CONTAINED HEREIN WAS CURRENT AT THE TIME OF DEVELOPMENT BUT MUST BE REVIEWED AND APPROVED BY THE PRODUCT MANUFACTURER TO BE CONSIDERED ACCURATE.

| APPLICATION | |
|---|---|
| NEXT ASSY | USED ON |
| | |
| | |
| | |

| | | | |
|---|---|---|---|
| SERIES NUMBER: | XX-S060-XX | CAGE CODE: 6NQJ8 / SIZE: | DRAWING NUMBER: 6in Cutsheet Size A - R1 |
| PRODUCT FAMILY: | FIXED BOLLARD | | |
| PRODUCT CLASS: | STANDARD OR CUSTOMER DEFINED | DRAWN BY: AJA | DRAWING REV: |
| PRODUCT LINE: | BOLLARD | CHECKED BY: | SHEET: 1 OF 1 |
| PRODUCT SUB LINE: | COVER | APPROVED BY: | RELEASE DATE: |


1-800-BOLLARDS, Inc.
10 Hughes Suite A105
Irvine, CA 92618
PHONE: 1-800-BOLLARDS
WEB: WWW.1800BOLLARDS.COM
EMAIL: INFO@1800BOLLARDS.COM


TITLE: BOLLARD, COVER