1-800-BOLLARDS

The Bollard Experts

REVISIONS			
LTR	DESCRIPTION	DATE	APPVD

COMMENTS

SPECIFICATIONS

HEIGHT: 36"
DIAMETER: 4.50"
WALL THICKNESS: 0.280" SCHED 40

☐ SELECT DESIRED MATERIAL:
(4" NOMINAL SIZE)
- ☐ FSS04000 SCH 10 STAINLESS STEEL
- ☐ FSS04040 SCH 40 STAINLESS STEEL
- ☐ FSS04080 SCH 80 STAINLESS STEEL
- ☐ FCS04040 SCH 40 ASTM A-53 CARBON STEEL
- ☐ FCS04080 SCH 80 ASTM A-53 CARBON STEEL

☐ SELECT DESIRED STAINLESS STEEL BOLLARD FINISH:
- ☐ POLISHED #4 FINISH
- ☐ AS SPECIFIED _____

☐ SELECT DESIRED CARBON STEEL BOLLARD FINISH:
- ☐ POWDER COAT RAL # _____
- ☐ AS SPECIFIED _____

☐ SELECT DESIRED STAINLESS STEEL BOLLARD MATERIAL:
- ☐ TYPE 304
- ☐ TYPE 316

☐ SELECT DESIRED BOLLARD CAP STYLE:
- ☐ DOME (SHOWN)
- ☐ STANDARD FLAT
- ☐ REVEAL
- ☐ SLOPED

Fixed Bollard

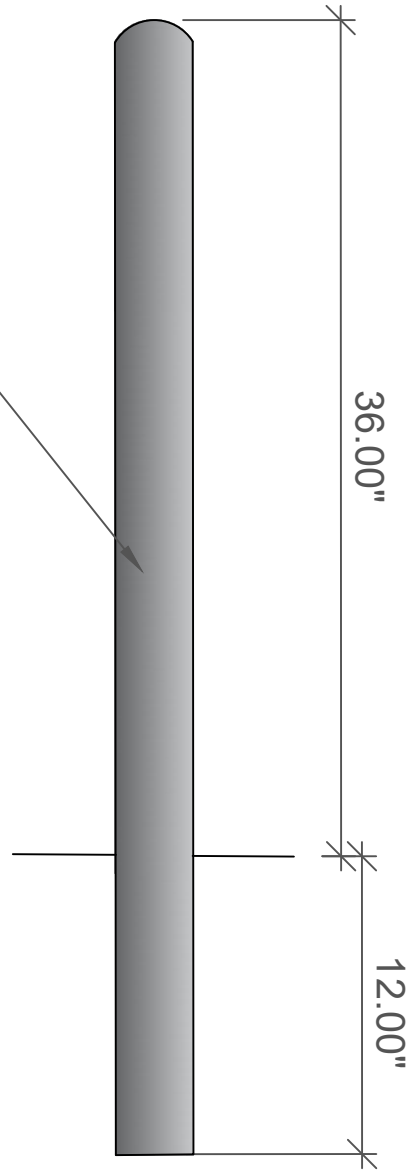

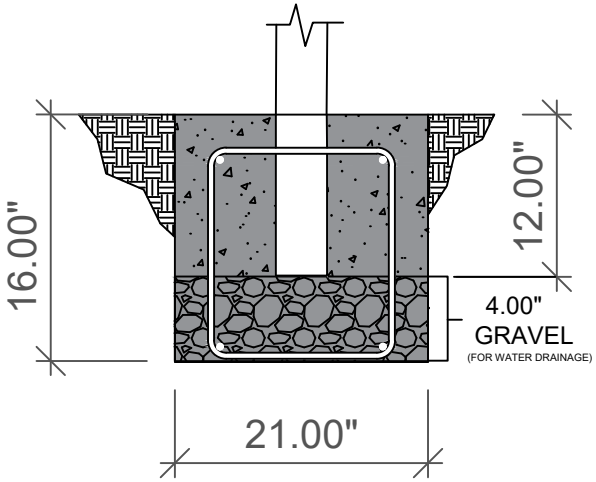

END VIEW - FOUNDATION

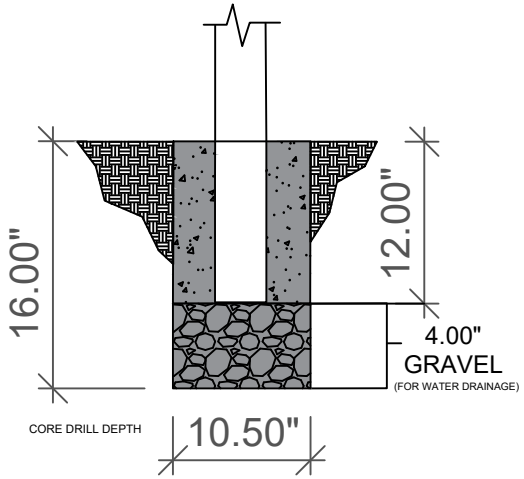

CORE DRILL MINIMUM DIAMETER

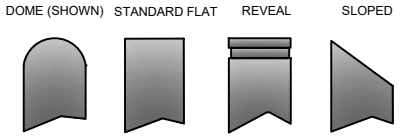

NOTES:
1. INSTALLATION TO BE COMPLETED IN ACCORDANCE WITH MANUFACTURER'S SPECIFICATIONS.
2. DO NOT SCALE DRAWING.
3. THIS DRAWING IS INTENDED FOR USE BY ARCHITECTS, ENGINEERS, CONTRACTORS, CONSULTANTS AND DESIGN PROFESSIONALS FOR PLANNING PURPOSES ONLY. THIS DRAWING MAY NOT BE USED FOR CONSTRUCTION.
4. ALL INFORMATION CONTAINED HEREIN WAS CURRENT AT THE TIME OF DEVELOPMENT BUT MUST BE REVIEWED AND APPROVED BY THE PRODUCT MANUFACTURER TO BE CONSIDERED ACCURATE.
5. CONTRACTOR'S NOTE: FOR PRODUCT AND COMPANY INFORMATION VISIT www.CADdetails.com/info AND ENTER REFERENCE NUMBER 5046-027.

APPLICATION	
NEXT ASSY	USED ON

SERIES NUMBER:	XX-S060-XX	CAGE CODE: 6NQJ8 / SIZE:	DRAWING NUMBER: 6in Cutsheet Size A - R1
PRODUCT FAMILY:	FIXED BOLLARD		
PRODUCT CLASS:	STANDARD OR CUSTOMER DEFINED	DRAWN BY: AJA	DRAWING REV:
PRODUCT LINE:	BOLLARD	CHECKED BY:	SHEET: 1 OF 1
PRODUCT SUB LINE:	FIXED	APPROVED BY:	RELEASE DATE:

1-800-BOLLARDS, Inc.
10 Hughes Suite A105
Irvine, CA 92618
PHONE: 1-800-BOLLARDS
WEB: WWW.1800BOLLARDS.COM
EMAIL: INFO@1800BOLLARDS.COM

TITLE: BOLLARD, FIXED