1-800-BOLLARDS

The Bollard Experts

REVISIONS			
LTR	DESCRIPTION	DATE	APPVD

COMMENTS

SPECIFICATIONS
HEIGHT: 38.00"
DIAMETER: 10.75"
WALL THICKNESS: 0.594"

10" M50 HIGH SECURITY SHALLOW MOUNT
☐ FMCSR1080 (REMOVABLE)

CARBON STEEL

☐ SELECT DESIRED CARBON STEEL BOLLARD FINISH:
- ☐ POWDER COAT RAL #_____
- ☐ AS SPECIFIED _____

☐ COVER SELECTION
- ☐ 304 STAINLESS STEEL
- ☐ 316 STAINLESS STEEL

☐ SELECT DESIRED BOLLARD CAP STYLE:
- ☐ DOME
- ☐ STANDARD FLAT
- ☐ REVEAL
- ☐ SLOPED

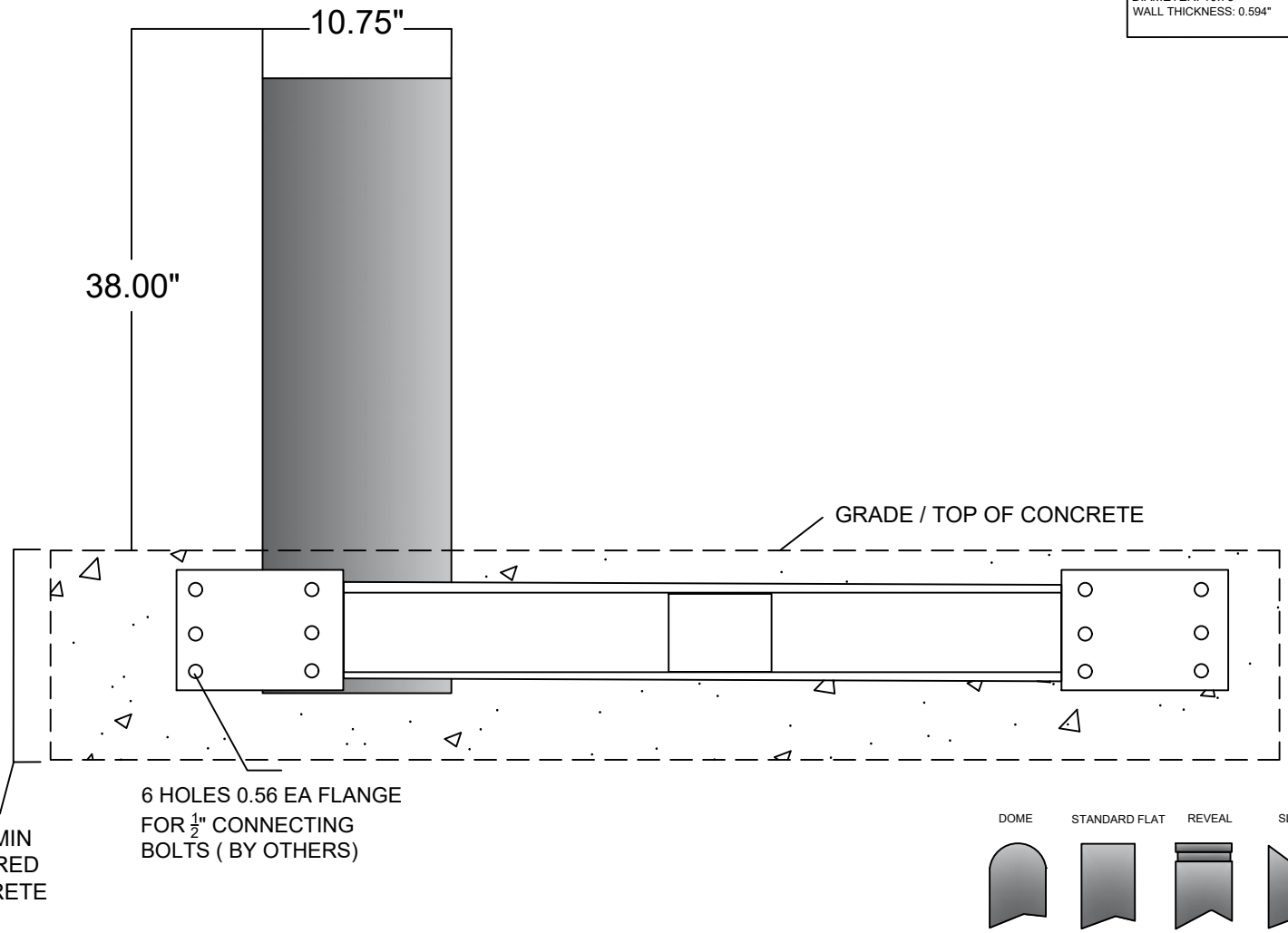

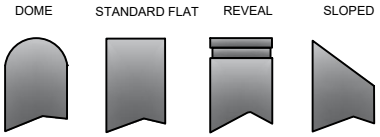

NOTES:
1. INSTALLATION TO BE COMPLETED IN ACCORDANCE WITH MANUFACTURER'S SPECIFICATIONS.
2. DO NOT SCALE DRAWING.
3. THIS DRAWING IS INTENDED FOR USE BY ARCHITECTS, ENGINEERS, CONTRACTORS, CONSULTANTS AND DESIGN PROFESSIONALS FOR PLANNING PURPOSES ONLY. THIS DRAWING MAY NOT BE USED FOR CONSTRUCTION.
4. ALL INFORMATION CONTAINED HEREIN WAS CURRENT AT THE TIME OF DEVELOPMENT BUT MUST BE REVIEWED AND APPROVED BY THE PRODUCT MANUFACTURER TO BE CONSIDERED ACCURATE.
5. CONTRACTOR'S NOTE: FOR PRODUCT AND COMPANY INFORMATION VISIT www.CADdetails.com/info AND ENTER REFERENCE NUMBER 5046-027.

APPLICATION	
NEXT ASSY	USED ON

SERIES NUMBER:	XX-S060-XX	CAGE CODE: 6NQJ8 / SIZE:	DRAWING NUMBER: M50 SHALLOW MOUNT
PRODUCT FAMILY:	M50 SHALLOW MOUNT		
PRODUCT CLASS:	STANDARD OR CUSTOMER DEFINED	DRAWN BY: AJA	DRAWING REV:
PRODUCT LINE:	BOLLARD	CHECKED BY:	SHEET: 1 OF 1
PRODUCT SUB LINE:	SHALLOW MOUNT	APPROVED BY:	RELEASE DATE:

1-800-BOLLARDS, Inc.
10 Hughes Suite A105
Irvine, CA 92618
PHONE: 1-800-BOLLARDS
WEB: WWW.1800BOLLARDS.COM
EMAIL: INFO@1800BOLLARDS.COM

TITLE:
BOLLARD, M50 SHALLOW MOUNT

1-800-BOLLARDS

The Bollard Experts

10" M50 HIGH SECURITY SHALLOW MOUNT
☐ FMCSR1080 (REMOVABLE)

CARBON STEEL

☐ SELECT DESIRED CARBON STEEL BOLLARD FINISH:

- ☐ POWDER COAT RAL #_____
- ☐ AS SPECIFIED _____

☐ COVER SELECTION

- ☐ 304 STAINLESS STEEL
- ☐ 316 STAINLESS STEEL

☐ SELECT DESIRED BOLLARD CAP STYLE:

- ☐ DOME
- ☐ STANDARD FLAT
- ☐ REVEAL
- ☐ SLOPED

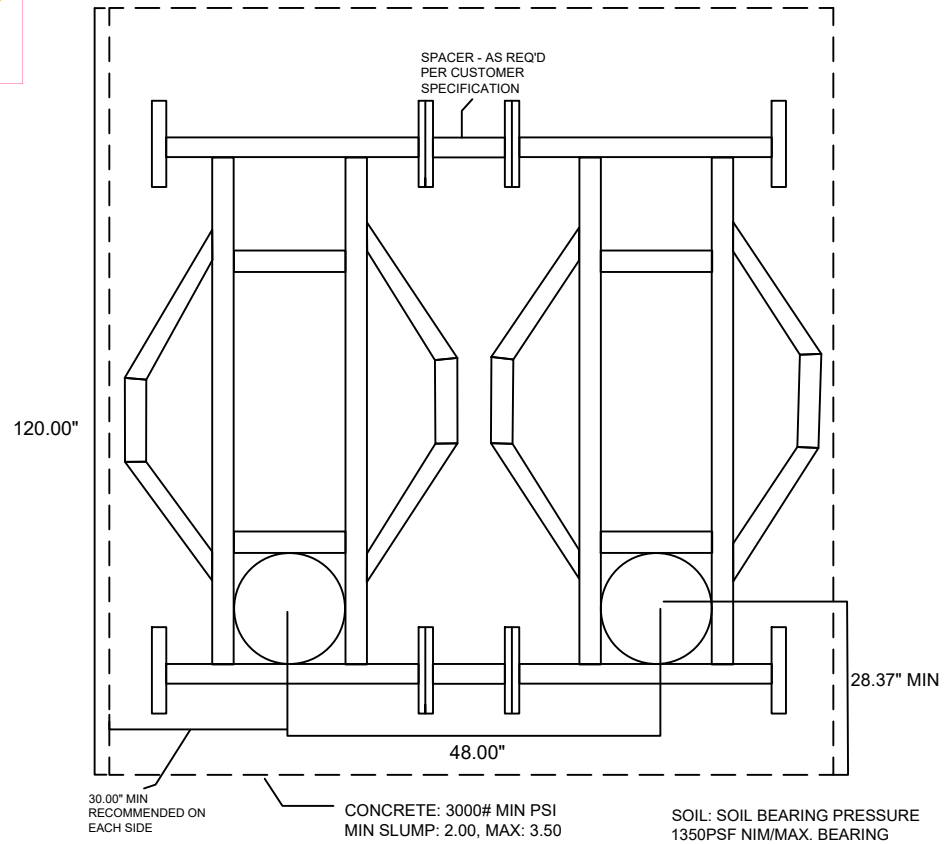

CONCRETE: 3000# MIN PSI
MIN SLUMP: 2.00, MAX: 3.50
CONFORM TO ACI 304 ASTM
C-150, COMPLY WITH ACI
304 WITH NO MORE THAN
5% AIR ENTRAINMENT MAC
WATER/CEMENT RATIO 0.46
FOR ENTRAINED CONCRETE

SOIL: SOIL BEARING PRESSURE
1350PSF NIM/MAX. BEARING
CAPACITY TO BE BETWEEN 1000# &
2000# PSF
O4 REBAR ON 12.00 CENTERSIN
BOTH DIRECTIONS, 2 LAYERS
EVENLY SPACED TOP & BOTTOM.
LOWER MAT OF REBAR TO BE 3.00
ABOVE BASE OF CONCRETE.

REVISIONS			
LTR	DESCRIPTION	DATE	APPVD

COMMENTS

SPECIFICATIONS
HEIGHT: 38.00"
DIAMETER: 10.75"
WALL THICKNESS: 0.594"

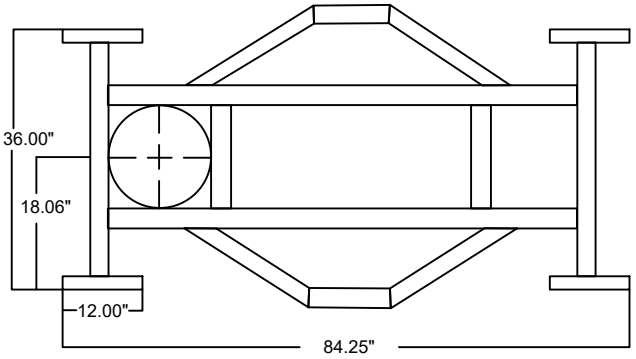

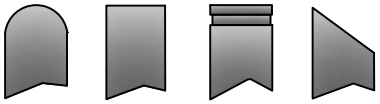

SERIES NUMBER:	XX-S060-XX	CAGE CODE: 6NQJ8 / SIZE:	DRAWING NUMBER: M50 SHALLOW MOUNT
PRODUCT FAMILY:	M50 SHALLOW MOUNT		
PRODUCT CLASS:	STANDARD OR CUSTOMER DEFINED	DRAWN BY: AJA	DRAWING REV:
PRODUCT LINE:	BOLLARD	CHECKED BY:	SHEET: 1 OF 1
PRODUCT SUB LINE:	SHALLOW MOUNT	APPROVED BY:	RELEASE DATE:

1-800-BOLLARDS, Inc.
10 Hughes Suite A105
Irvine, CA 92618
PHONE: 1-800-BOLLARDS
WEB: WWW.1800BOLLARDS.COM
EMAIL: INFO@1800BOLLARDS.COM

TITLE: BOLLARD, M50 SHALLOW MOUNT

APPLICATION	
NEXT ASSY	USED ON

NOTES:
1. INSTALLATION TO BE COMPLETED IN ACCORDANCE WITH MANUFACTURER'S SPECIFICATIONS.
2. DO NOT SCALE DRAWING.
3. THIS DRAWING IS INTENDED FOR USE BY ARCHITECTS, ENGINEERS, CONTRACTORS, CONSULTANTS AND DESIGN PROFESSIONALS FOR PLANNING PURPOSES ONLY. THIS DRAWING MAY NOT BE USED FOR CONSTRUCTION.
4. ALL INFORMATION CONTAINED HEREIN WAS CURRENT AT THE TIME OF DEVELOPMENT BUT MUST BE REVIEWED AND APPROVED BY THE PRODUCT MANUFACTURER TO BE CONSIDERED ACCURATE.
5. CONTRACTOR'S NOTE: FOR PRODUCT AND COMPANY INFORMATION VISIT www.CADdetails.com/info AND ENTER REFERENCE NUMBER 5046-027.