# 1-800-BOLLARDS

**The Bollard Experts**

| REVISIONS | | | |
|---|---|---|---|
| LTR | DESCRIPTION | DATE | APPVD |
| | | | |
| | | | |
| | | | |

COMMENTS

**SPECIFICATIONS**

HEIGHT: 36"
DIAMETER: 8.625"
WALL THICKNESS: 0.500"

- ☐ SELECT DESIRED MATERIAL: (8" NOMINAL SIZE)
  - ☐ FCSCT08080 SCH 80 ASTM A-53 CARBON STEEL
  - ☐ FCSCT08080 SCH 80 SATAINLESS STEEL
- ☐ SELECT DESIRED STAINLESS STEEL BOLLARD FINISH:
  - ☐ POLISHED #4 FINISH
  - ☐ AS SPECIFIED _____
- ☐ SELECT DESIRED CARBON STEEL BOLLARD FINISH:
  - ☐ POWDER COAT RAL # _____
  - ☐ AS SPECIFIED _____
- ☐ SELECT DESIRED STAINLESS STEEL BOLLARD MATERIAL:
  - ☐ TYPE 304
  - ☐ TYPE 316
- ☐ SELECT DESIRED BOLLARD CAP STYLE:
  - ☐ DOME (SHOWN)
  - ☐ STANDARD FLAT
  - ☐ REVEAL
  - ☐ SLOPED

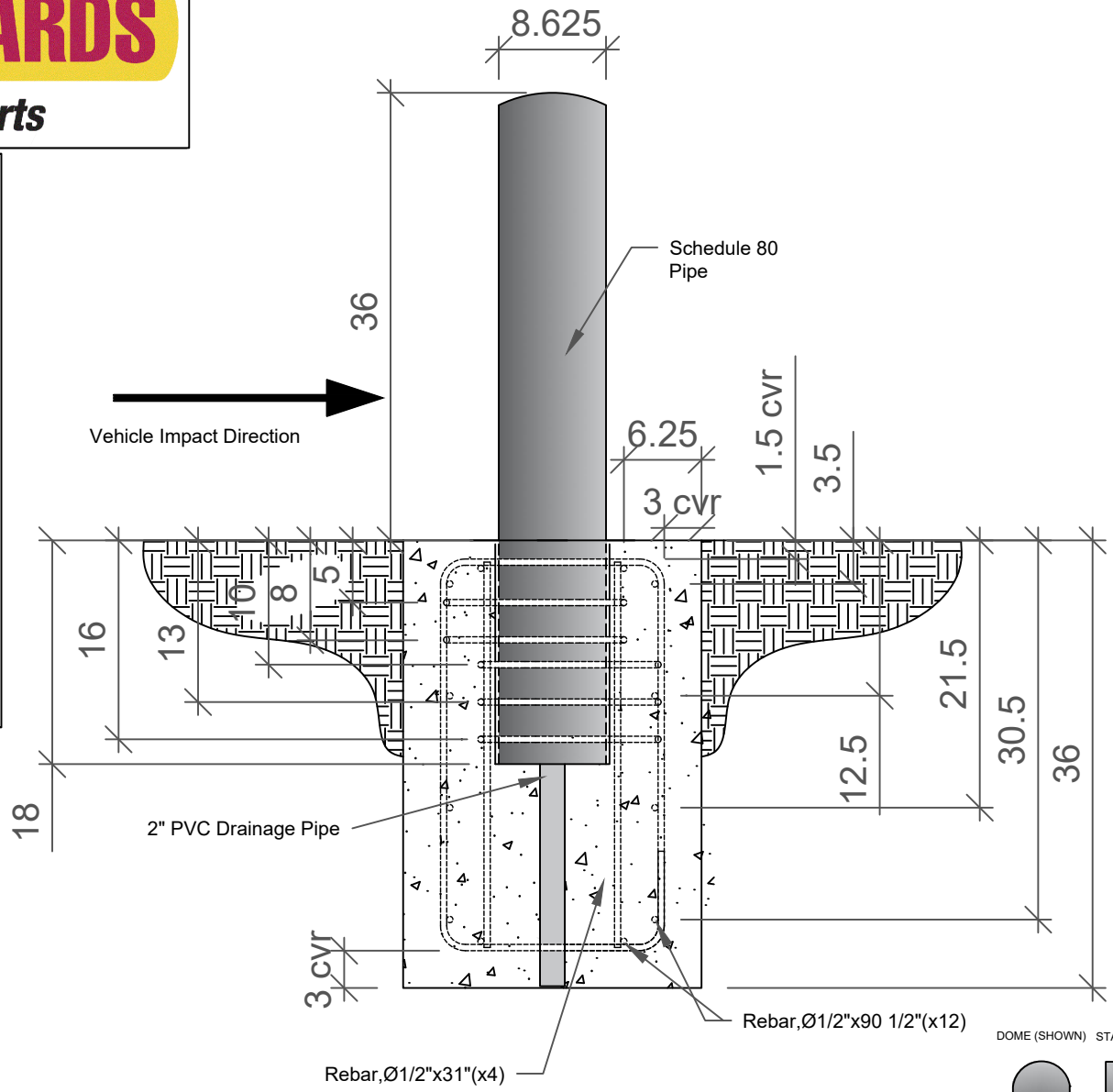


END VIEW-FOUNDATION

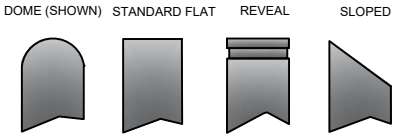


| APPLICATION | |
|---|---|
| NEXT ASSY | USED ON |
| | |
| | |
| | |

| | | | |
|---|---|---|---|
| SERIES NUMBER: | XX-S060-XX | CAGE CODE: 6NQJ8 / SIZE: | DRAWING NUMBER: 8" CT FIXED |
| PRODUCT FAMILY: | 30 MPH CRASH TESTED | DRAWN BY: AJA | DRAWING REV: |
| PRODUCT CLASS: | STANDARD OR CUSTOMER DEFINED | CHECKED BY: | SHEET: 1 OF 1 |
| PRODUCT LINE: | BOLLARD | APPROVED BY: | RELEASE DATE: |
| PRODUCT SUB LINE: | FIXED | | |


1-800-BOLLARDS, Inc.
10 Hughes Suite A105
Irvine, CA 92618
PHONE: 1-800-BOLLARDS
WEB: WWW.1800BOLLARDS.COM
EMAIL: INFO@1800BOLLARDS.COM


TITLE: BOLLARD, CT FIXED

NOTES:
1. INSTALLATION TO BE COMPLETED IN ACCORDANCE WITH MANUFACTURER'S SPECIFICATIONS.
2. DO NOT SCALE DRAWING.
3. THIS DRAWING IS INTENDED FOR USE BY ARCHITECTS, ENGINEERS, CONTRACTORS, CONSULTANTS AND DESIGN PROFESSIONALS FOR PLANNING PURPOSES ONLY. THIS DRAWING
4. ALL INFORMATION CONTAINED HEREIN WAS CURRENT AT THE TIME OF DEVELOPMENT BUT MUST BE REVIEWED AND APPROVED BY THE PRODUCT MANUFACTURER TO BE CONSIDERED ACCURATE.

# 1-800-BOLLARDS

*The Bollard Experts*

| REVISIONS | | | |
|---|---|---|---|
| LTR | DESCRIPTION | DATE | APP |
| | | | |
| | | | |
| | | | |

COMMENTS

**SPECIFICATIONS**

HEIGHT: 36"
DIAMETER: 8.625"
WALL THICKNESS: 0.500"

- ☐ SELECT DESIRED MATERIAL: (8" NOMINAL SIZE)
  - ☐ FCSCT08080 SCH 80 ASTM A-53 CARBON STEEL
  - ☐ FCSCT08080 SCH 80 SATAINLESS STEEL
- ☐ SELECT DESIRED STAINLESS STEEL BOLLARD FINISH:
  - ☐ POLISHED #4 FINISH
  - ☐ AS SPECIFIED _____
- ☐ SELECT DESIRED CARBON STEEL BOLLARD FINISH:
  - ☐ POWDER COAT RAL # _____
  - ☐ AS SPECIFIED _____
- ☐ SELECT DESIRED STAINLESS STEEL BOLLARD MATERIAL:
  - ☐ TYPE 304
  - ☐ TYPE 316
- ☐ SELECT DESIRED BOLLARD CAP STYLE:
  - ☐ DOME (SHOWN)
  - ☐ STANDARD FLAT
  - ☐ REVEAL
  - ☐ SLOPED

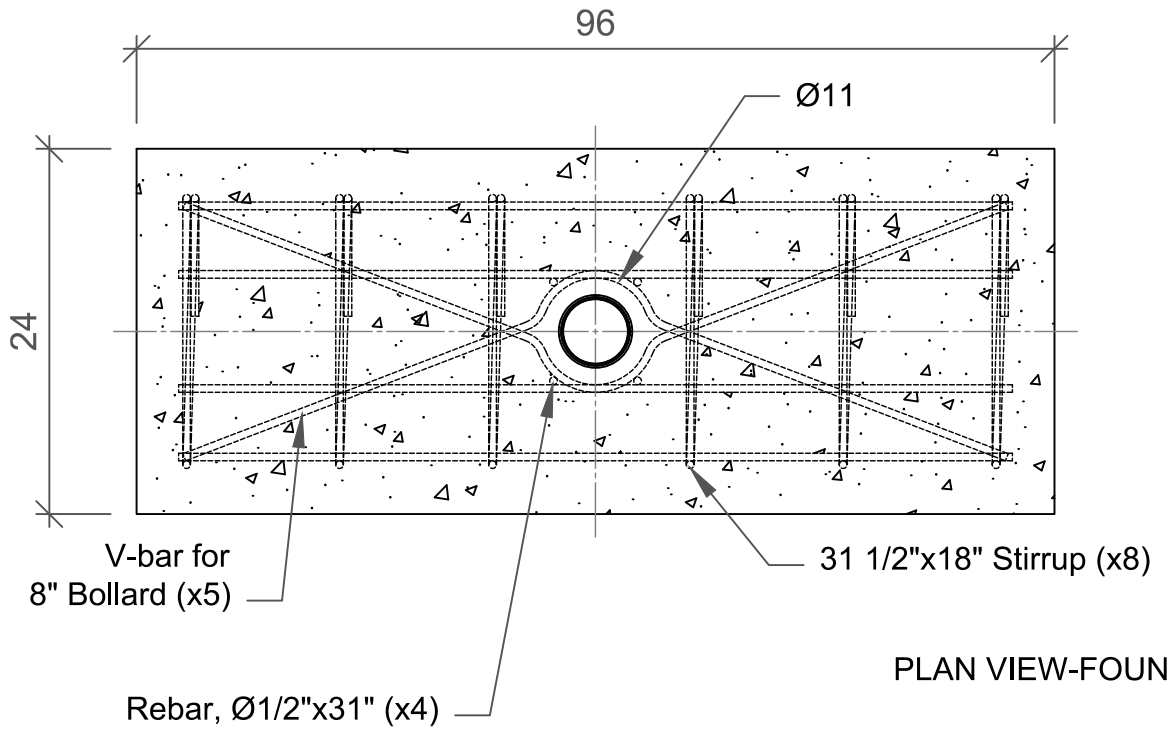


PLAN VIEW-FOUNDATION

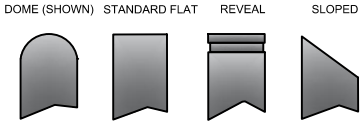


| APPLICATION | |
|---|---|
| NEXT ASSY | USED ON |
| | |
| | |
| | |

| | | | |
|---|---|---|---|
| SERIES NUMBER: XX-S060-XX | CAGE CODE: 6NQJ8 | SIZE: | DRAWING NUMBER: 8" CT FIXED |
| PRODUCT FAMILY: 30 MPH CRASH TESTED | | | |
| PRODUCT CLASS: STANDARD OR CUSTOMER DEFINED | DRAWN BY: AJA | | DRAWING REV: |
| PRODUCT LINE: BOLLARD | CHECKED BY: | | SHEET: 1 OF 1 |
| PRODUCT SUB LINE: FIXED | APPROVED BY: | | RELEASE DATE: |
| 1-800-BOLLARDS, Inc.<br>10 Hughes Suite A103<br>Irvine, CA 92618<br>PHONE: 1-800-BOLLARDS<br>WEB: WWW.1800BOLLARDS.COM<br>EMAIL: INFO@1800BOLLARDS.COM | TITLE: BOLLARD, CT FIXED | | |

NOTES:
1. INSTALLATION TO BE COMPLETED IN ACCORDANCE WITH MANUFACTURER'S SPECIFICATIONS.
2. DO NOT SCALE DRAWING.
3. THIS DRAWING IS INTENDED FOR USE BY ARCHITECTS, ENGINEERS, CONTRACTORS, CONSULTANTS AND DESIGN PROFESSIONALS FOR PLANNING PURPOSES ONLY. THIS DRAWING
4. ALL INFORMATION CONTAINED HEREIN WAS CURRENT AT THE TIME OF DEVELOPMENT BUT MUST BE REVIEWED AND APPROVED BY THE PRODUCT MANUFACTURER TO BE CONSIDERED ACCURATE.

# 1-800-BOLLARDS

**The Bollard Experts**

| REVISIONS | | | |
|---|---|---|---|
| LTR | DESCRIPTION | DATE | APPVD |
| | | | |
| | | | |
| | | | |

COMMENTS

**SPECIFICATIONS**

HEIGHT: 36"
DIAMETER: 8.625"
WALL THICKNESS: 0.500"

- ☐ SELECT DESIRED MATERIAL: (8" NOMINAL SIZE)
  - ☐ FCSCT08080 SCH 80 ASTM A-53 CARBON STEEL
  - ☐ FCSCT08080 SCH 80 SATAINLESS STEEL
- ☐ SELECT DESIRED STAINLESS STEEL BOLLARD FINISH:
  - ☐ POLISHED #4 FINISH
  - ☐ AS SPECIFIED _____
- ☐ SELECT DESIRED CARBON STEEL BOLLARD FINISH:
  - ☐ POWDER COAT RAL # _____
  - ☐ AS SPECIFIED _____
- ☐ SELECT DESIRED STAINLESS STEEL BOLLARD MATERIAL:
  - ☐ TYPE 304
  - ☐ TYPE 316
- ☐ SELECT DESIRED BOLLARD CAP STYLE:
  - ☐ DOME (SHOWN)
  - ☐ STANDARD FLAT
  - ☐ REVEAL
  - ☐ SLOPED

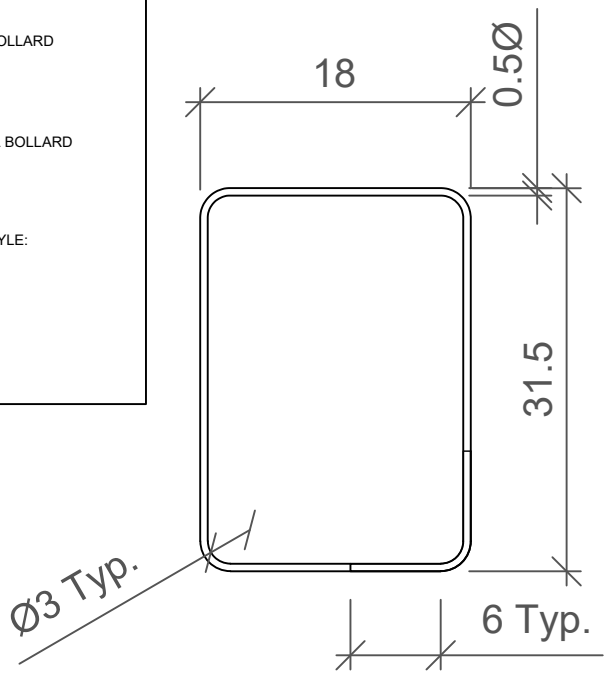


31 1/2" x 18" Stirrup

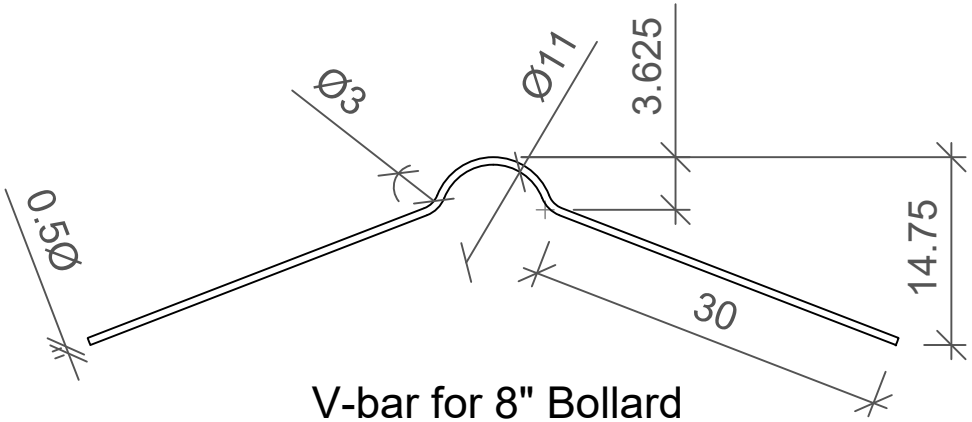


V-bar for 8" Bollard

DOME (SHOWN) STANDARD FLAT REVEAL SLOPED

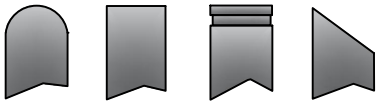

| | | | | |
|---|---|---|---|---|
| SERIES NUMBER: | XX-S060-XX | CAGE CODE: 6NQJ8 | SIZE: | DRAWING NUMBER: 8" CT FIXED |
| PRODUCT FAMILY: | 30 MPH CRASH TESTED | | | |
| PRODUCT CLASS: | STANDARD OR CUSTOMER DEFINED | DRAWN BY: AJA | | DRAWING REV: |
| PRODUCT LINE: | BOLLARD | CHECKED BY: | | SHEET: 1 OF 1 |
| PRODUCT SUB LINE: | FIXED | APPROVED BY: | | RELEASE DATE: |


1-800-BOLLARDS, Inc.
10 Hughes Suite A105
Irvine, CA 92618
PHONE: 1-800-BOLLARDS
WEB: WWW.1800BOLLARDS.COM
EMAIL: INFO@1800BOLLARDS.COM


TITLE: BOLLARD, CT FIXED

| APPLICATION | |
|---|---|
| NEXT ASSY | USED ON |
| | |
| | |
| | |

NOTES:
1. INSTALLATION TO BE COMPLETED IN ACCORDANCE WITH MANUFACTURER'S SPECIFICATIONS.
2. DO NOT SCALE DRAWING.
3. THIS DRAWING IS INTENDED FOR USE BY ARCHITECTS, ENGINEERS, CONTRACTORS, CONSULTANTS AND DESIGN PROFESSIONALS FOR PLANNING PURPOSES ONLY. THIS DRAWING
4. ALL INFORMATION CONTAINED HEREIN WAS CURRENT AT THE TIME OF DEVELOPMENT BUT MUST BE REVIEWED AND APPROVED BY THE PRODUCT MANUFACTURER TO BE CONSIDERED ACCURATE.